X Axis Rack and Pinion Dovetail Translation Stages
X Axis Dual Drive Rack and Pinion Dovetail Translation Stages

TAR-1 RoHS
TAR-D RoHS

Rack and pinion dovetail translation stages, suitable for frequent use that requires quick movement and long travel.

Mounting Method

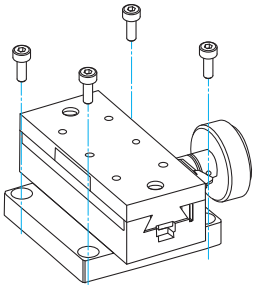

Guide

▶Use adaptor plates for TAR (SP-109 and SP-131) to mount post holders and various stages.
SP-109 Reference D043 Catalog Code W6061
SP-131 Reference D045 Catalog Code W6073

Bottom Plate	Primary material: Aluminum Finish: Black Anodized

TAR-34601/34801/34141 include a base plate that allows mounting on instruments or bases fitted with M4 tapped holes on 50 × 50mm, preventing the handle from contacting the mounting surface.

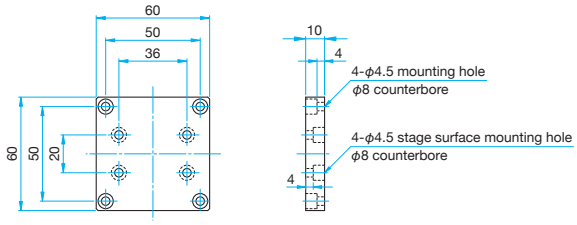

Specifications

Part Number	METRIC	TAR-34601	TAR-34801	TAR-34141	TAR-38651-M6	TAR-381201-M6	TAR-38601D	TAR-38801D	TAR-38141D
	INCH	—	—	—	TAR-38651UU	TAR-381201UU	—	—	—
Stage Size [mm]		34×60	34×80	34×140	38×65	38×120	38×60	38×80	38×140
Axes of Travel		X axis							
Travel [mm]		±15	±25	±50	±15	±40	Coars: ±15 Fine: ±15	Coars: ±25 Fine: ±25	Coars: ±50 Fine: ±50
Lead of Actuator [mm/rotation]		about 20	about 20	about 20	about 20	about 20	Coars: about 20 Fine: 2.5	Coars: about 20 Fine: 2.5	Coars: about 20 Fine: 2.5
Vernier Scale [mm]		0.1	0.1	0.1	0.1	0.1	0.1	0.1	0.1
Guide Method		Dovetail method							
Primary Material		Brass							
Finish		Super black chrome							
Load Capacity [N]		147 (15.0kgf)	196 (20.0kgf)	245 (25.0kgf)	147 (15.0kgf)	245 (25.0kgf)	147 (15.0kgf)	196 (20.0kgf)	245 (25.0kgf)
Travel Accuracy	Straightness [μm]	20	30	30	20	30	20	30	30
Max. Moment Capacity	Pitch [N·m]	2.9	3.8	6.9	2.9	6	2.9	3.8	6.9
	Roll [N·m]	1.5	1.5	2.0	1.5	1.5	1.5	1.5	2.0
	Yaw [N·m]	2.0	2.6	3.9	2.0	3.0	2.00	2.6	3.9
Moment Stiffness	Pitch [″/N·cm]	0.36	0.26	0.05	0.36	0.7	0.51	0.36	0.05
	Roll [″/N·cm]	0.82	0.82	0.82	0.82	0.2	0.92	0.92	0.92
Parallelism [μm]		60	60	80	60	80	60	60	80
Weight [kg]		0.5	0.8	1.0	0.6	1.0	0.5	0.8	1.0

2D CAD 3D CAD

Outline Drawing

TAR-34601

Hexagonal socket head cap screw M4×8…4 screws

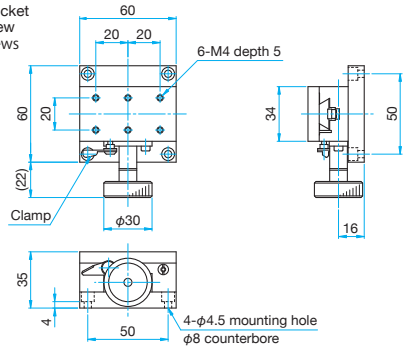

TAR-34801

Hexagonal socket head cap screw M4×8…4 screws

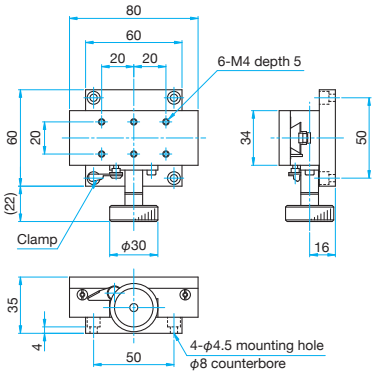

TAR-34141

Hexagonal socket head cap screw M4×8… 4 screws

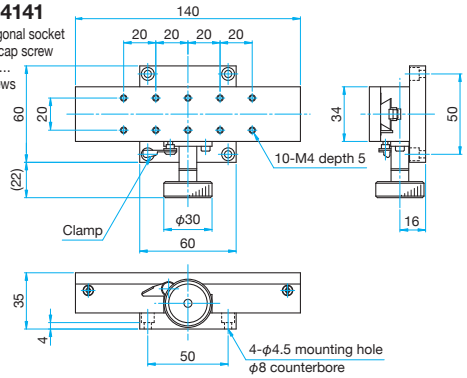

TAR-38651-M6
TAR-38651UU

Hexagonal socket head cap screw M6×10…4 screws (M6)
Hexagonal socket head cap screw 1/4-20UNC×3/8…4 screws (UU)

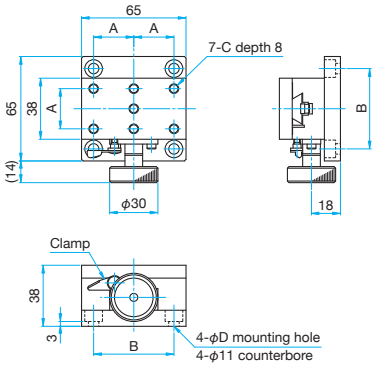

Part Number	A (mm)	B (mm)	C	D (mm)
TAR-38651-M6	25	50	M6 P1	6.5
TAR-38651UU	25.4	50.8	1/4-20UNC	7

TAR-38601D

Hexagonal socket head cap screw M4×8…4 screws

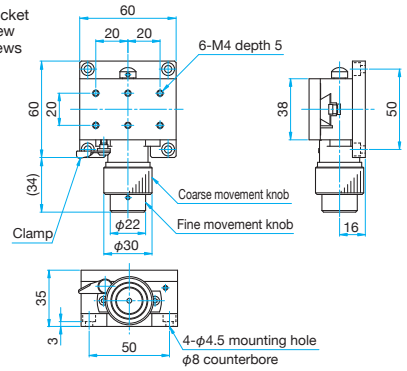

TAR-38801D

Hexagonal socket head cap screw M4×8…4 screws

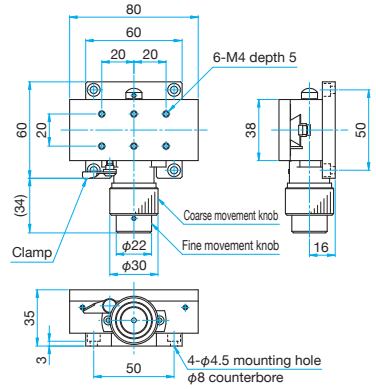

TAR-38141D

Hexagonal socket head cap screw M4×8…4 screws

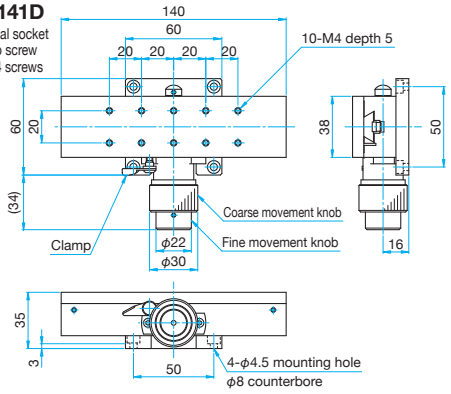

TAR-381201-M6
TAR-381201UU

Hexagonal socket head cap screw M6×10…4 screws (M6)
Hexagonal socket head cap screw 1/4-20UNC×3/8…4 screws (UU)

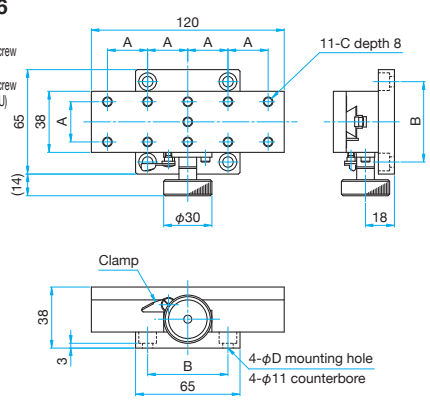

Part Number	A (mm)	B (mm)	C	D (mm)
TAR-381201-M6	25	50	M6 P1	6.5
TAR-381201UU	25.4	50.8	1/4-20UNC	7

XY Axis Rack and Pinion Translation Stages | TARW/TAR-2 RoHS

Rack and pinion dovetail translation stages, suitable for frequent use that requires quick and long travel.

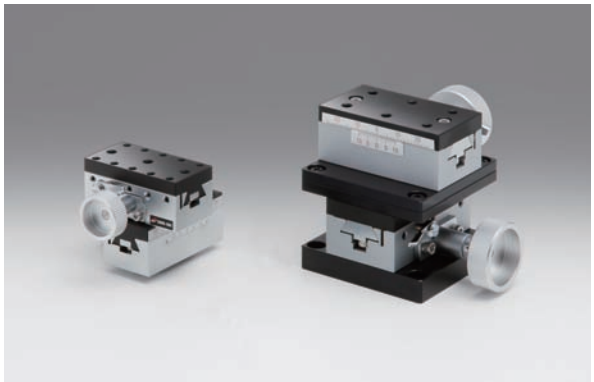

Guide

▶Use adaptor plates for TAR (SP-109) and for TAS-2060 (SP-127-1) to mount post holders and various stages.
SP-109 Reference D039 Catalog Code W6061
SP-127-1 Reference D041 Catalog Code W6069

Attention

▶The knurled adjustment knob of the TARW-25502 protrudes from the bottom surface of the stage. Therefore, it cannot be directly mounted on a flat surface without the use of a spacer.

Mounting Method

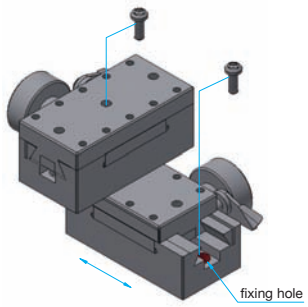

Stage must be translated to provide access to all of the mounting holes.

Bottom Plate Primary material: Aluminum Finish: Black Anodized

TAR-34602/34802 include a base plate that allows mounting on instruments or bases fitted with M4 tapped holes on 50 × 50mm, preventing the handle from contacting the mounting surface.

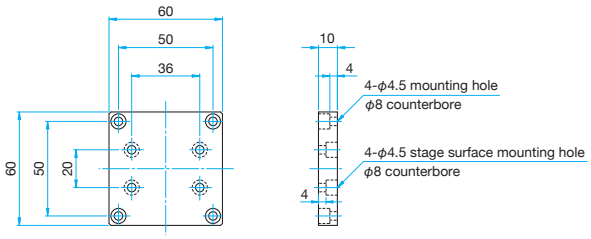

Specifications

Part Number	METRIC	TARW-25502	TAR-34602	TAR-34802	TAR-38652-M6	TAR-381202-M6
	INCH	–	–	–	TAR-38652UU	TAR-381202UU
Stage Size [mm]		25×50	34×60	34×80	38×65	38×120
Axes of Travel		XY axis				
Travel [mm]		XY axis: ±10	XY axis: ±15	XY axis: ±25	XY axis: ±15	X axis: ±40 Y axis: ±15
Lead of Actuator [mm/rotation]		about 20	about 20	about 20	about 20	about 20
Vernier Scale [mm]		0.1	0.1	0.1	0.1	0.1
Guide Method		Dovetail method				
Primary Material		Brass				
Finish		Super black chrome				
Load Capacity [N]		78.5 (8.0kgf)	147 (15.0kgf)	196 (20.0kgf)	147 (15.0kgf)	245 (25.0kgf)
Travel Accuracy	Straightness [μm]	20	20	30	20	30
Max. Moment Capacity	Pitch [N·m]	0.6	1.5	1.5	2.9	3.0
	Roll [N·m]	0.6	1.5	1.5	1.5	1.5
	Yaw [N·m]	1.0	2.0	2.6	2.0	2.5
Moment Stiffness	Pitch [″/N·cm]	3.67	1.2	1.1	0.15	0.3
	Roll [″/N·cm]	3.67	1.2	1.1	0.15	0.15
Parallelism [μm]		100	140	160	140	160
Weight [kg]		0.44	1.0	1.6	1.2	1.9

2D CAD 3D CAD

Outline Drawing

TARW-25502

Pan head screw M3×8…4 screws

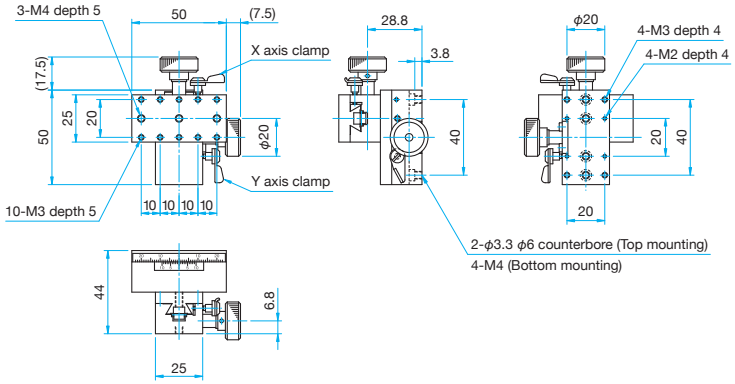

TAR-34602

Hexagonal socket head cap screw M4×8…4 screws

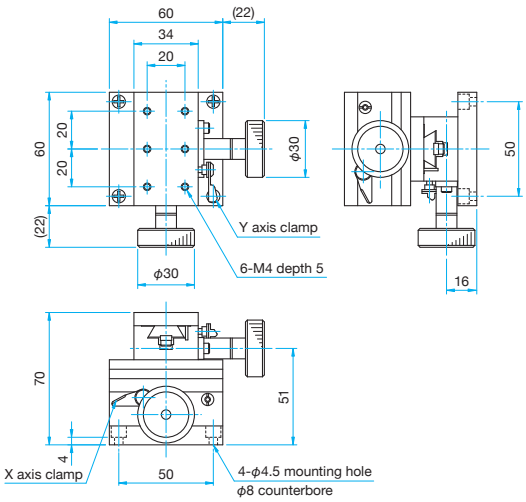

TAR-34802

Hexagonal socket head cap screw M4×8…4 screws

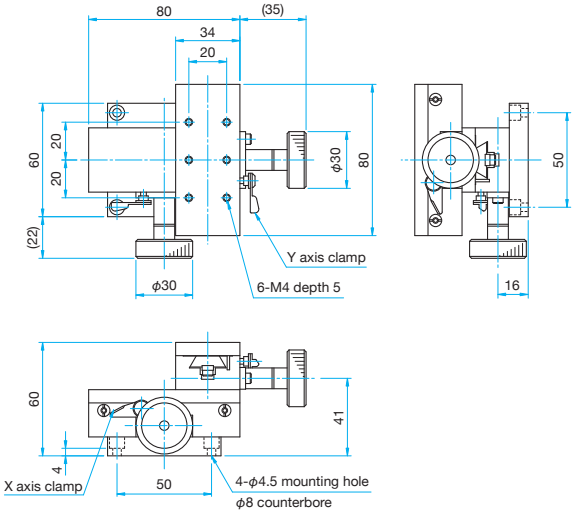

TAR-38652-M6/38652UU

Hexagonal socket head cap screw M6×10…4 screws (M6)
Hexagonal socket head cap screw 1/4-20UNC×3/8…4 screws (UU)

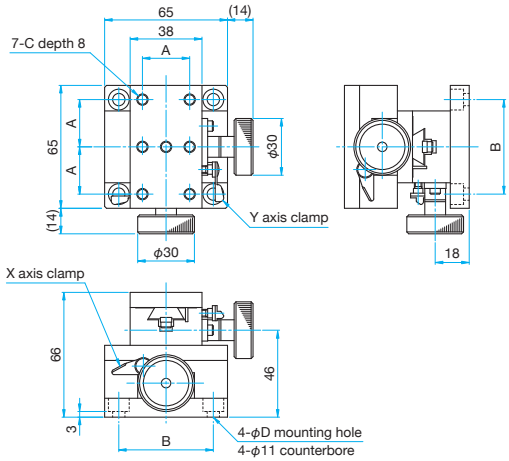

Part Number	A (mm)	B (mm)	C	D (mm)
TAR-38652-M6	25	50	M6 P1	6.5
TAR-38652UU	25.4	50.8	1/4-20UNC	7

TAR-381202-M6/381202UU

Hexagonal socket head cap screw M6×10…4 screws (M6)
Hexagonal socket head cap screw 1/4-20UNC×3/8…4 screws (UU)

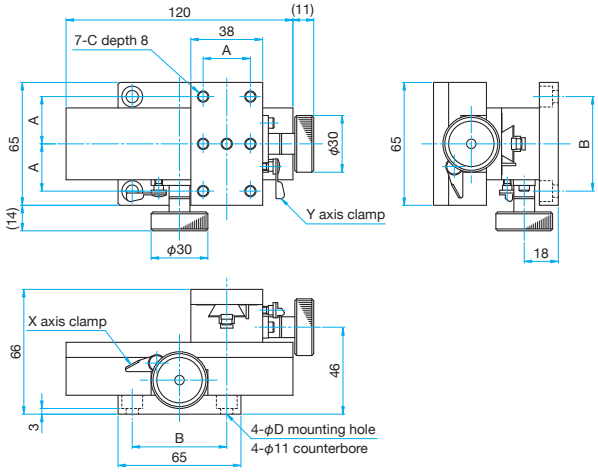

Part Number	A (mm)	B (mm)	C	D (mm)
TAR-381202-M6	25	50	M6 P1	6.5
TAR-381202UU	25.4	50.8	1/4-20UNC	7

Z Axis Rack and Pinion Dovetail Translation Stages (Vertical) TARW-L RoHS Catalog Code W7052
Z Axis Rack and Pinion Dovetail Translation Stages (Vertical) TAR-L RoHS Catalog Code W7053

Application Systems
Optics & Optical Coatings
Opto-Mechanics
Bases
Manual Stages
Actuators & Adjusters
Motoeized Stages
Light Sources & Laser Safety
Index
Guide
X Axis Stages
XY Axis Stages
Z Axis Stages
XZ Axis Stages
XYZ Axis Stages
Rotation Stages
Goniometer
Tilt Stages
Vacuum
Ball Bearing Guide
Crossed Roller
Dovetail
Lapping
V Groove Screw
Ohters
15 × 15 mm
25 × 25 mm
40 × 40 mm
60 × 60 mm
65 × 65 mm
80 × 80 mm
100 × 100 mm
120 × 120 mm
Others

Z axis rack and pinion dovetail translation stages, suitable for frequent use that requires quick movement and long travel.

- The TAR series translation stages have dovetail rack and pinion guides.
- They are suitable for frequent operations that require quick motion and long travel.
- The model TAR-60553D model and TAR-60703D incorporates a course and fine adjustment.

TAR-34403L Bottom Plate

Primary material: Aluminum
Finish: Black Anodized

TAR-34403L include a base plate that allows mounting on instruments or bases fitted with M4 tapped holes on 50 × 50mm, preventing the handle from contacting the mounting surface.

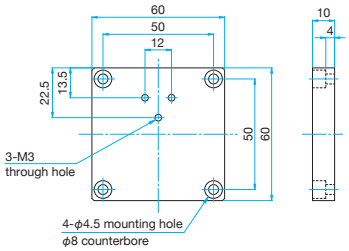

Specifications

Part Number	METRIC	TARW-25503L	TAR-34403L	TAR-34603L	TAR-34803L	TAR-38403L-M6	TAR-60553D	TAR-60703D
	INCH	–	–	–	–	TAR-38403LUU	–	–
Stage Size [mm]		25×50	34×40	34×60	34×80	38×40	60×60	60×60
Axes of Travel		Z axis						
Travel [mm]		±10	+25 / –20	±15	+20 / –10	+25 / –20	Coars: +18 / –0 Fine: +18 / –0	Coars: +33 / –0 Fine: +33 / –0
Lead of Actuator [mm/rotation]		about 20	about 20	about 20	about 20	about 20	Coars: about 20 Fine: about 2.5	Coars: about 20 Fine: about 2.5
Vernier Readable Resolution [mm]		0.1	0.1	0.1	0.1	0.1	0.1	0.1
Guide Method		Dovetail slide method						
Primary Material		Brass / Aluminum						
Finish		Super black chrome / Black anodized						
Load Capacity [N]		9.8 (1.0kgf)	14.7 (1.5kgf)	14.7 (1.5kgf)	14.7 (1.5kgf)	14.7 (1.5kgf)	14.7 (1.5kgf)	14.7 (1.5kgf)
Travel Accuracy	Straightness [μm]	30	20	20	30	30	20	20
Max. Moment Capacity	Pitch [N·m]	0.6	1.5	1.4	1.9	1.5	1.5	1.5
	Roll [N·m]	0.5	1.0	1.2	1.5	1.0	1.0	1.0
Moment Stiffness	Pitch [″/N·cm]	1.53	0.51	0.41	0.41	0.51	0.61	0.61
Parallelism [μm]		–	–	–	–	–	80	80
Squareness [μm]		50	50	100	100	50	–	–
Weight [kg]		0.3	0.5	0.8	1.1	0.6	0.55	0.6

2D CAD 3D CAD

Outline Drawing

TARW-25503L

Pan head screw M3×10…2 screws
Pan head screw M4×10…2 screws

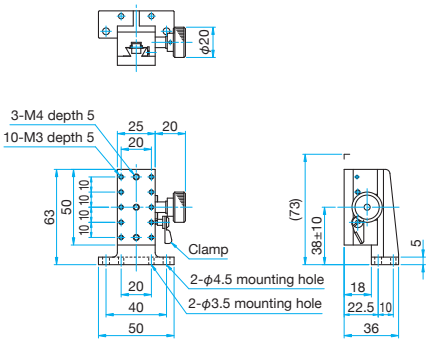

TAR-34403L

Hexagonal socket head cap screw M4×8…4 screws

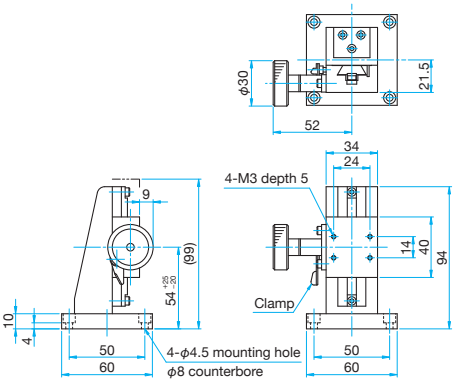

TAR-34603L

Hexagonal socket head cap screw M4×12…4 screws

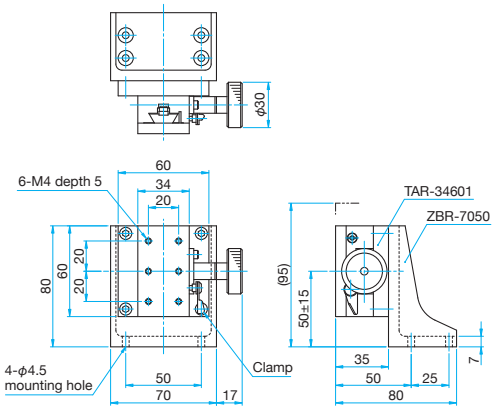

TAR-34803L

Hexagonal socket head cap screw M4×12…4 screws

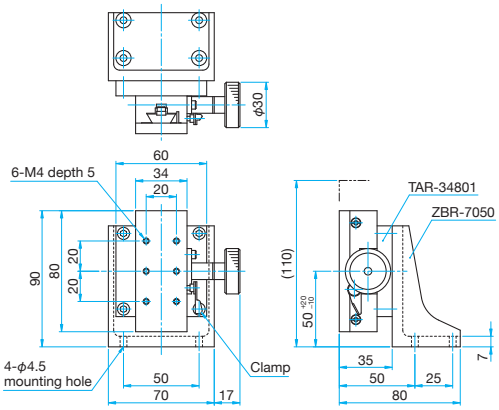

TAR-38403L-M6/38403LUU

Hexagonal socket head cap screw M6×10…4 screws (M6)
Hexagonal socket head cap screw 1/4-20UNC×3/8…4 screws (UU)

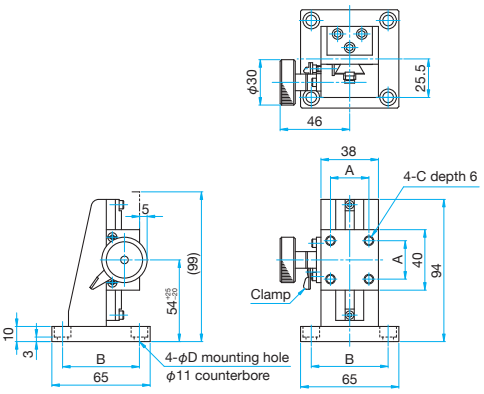

Part Number	A (mm)	B (mm)	C	D (mm)
TAR-38403L-M6	25	50	M6	6.5
TAR-38403LUU	25.4	50.8	1/4-20UNC	7

TAR-60553D

Hexagonal socket head cap screw M4×8…4 screws

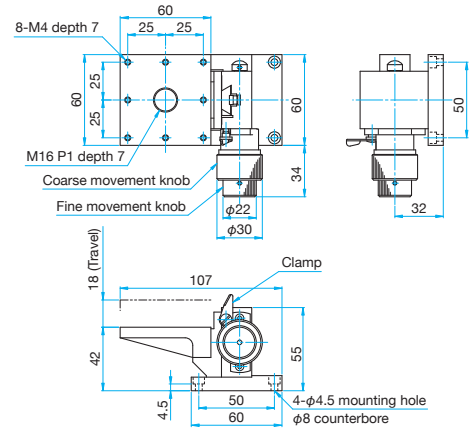

TAR-60703D

Hexagonal socket head cap screw M4×8…4 screws

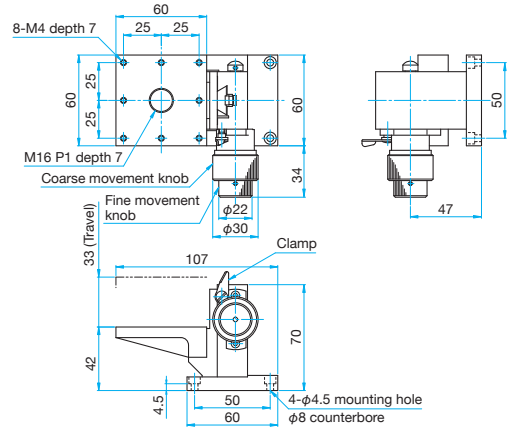

XZ Axis Leadscrew Translation Stages
XZ Axis Rack and Pinion Dovetail Translation Stages

TAS-4L RoHS Catalog Code W7069
TAR-4L RoHS Catalog Code W7070

TAS model : XZ axis leadscrew dovetail translation stages with rectangular form factor, enabling longer travel with fine adjustment.
TAR model : XZ axis rack and pinion dovetail translation stages, suitable for frequent use that requires quick movement and long travel.

- TAR-4D model : The TAR series translation stages have dovetail rack and pinion guides. They are suitable for frequent operations that require quick motion and long travel. This model incorporates a course and fine adjustment.

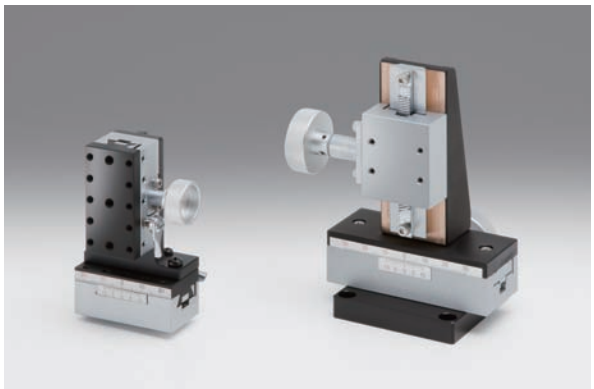

Guide

▶Micrometer brackets may extend above the top surface of some stages. Check drawings for more information.

Mounting Method

■TAS-24304L

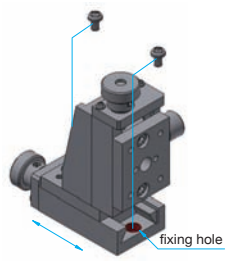

■TAR-25504L

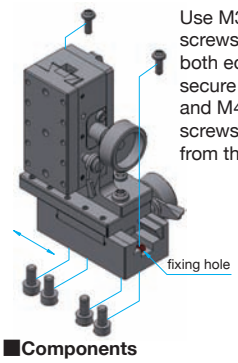

Use M3 pan head screws (only on both edges) to secure from the top, and M4 pan head screws to secure from the bottom.

■Components

Part Number	TAR-25504L
Z Axis	TARW-25503L
X Axis	TARW-25501

Bottom Plate

Primary material: Aluminum
Finish: Black Anodized

TAR-34804L include a base plate that allows mounting on instruments or bases fitted with M4 tapped holes on 50 × 50mm, preventing the handle from contacting the mounting surface.

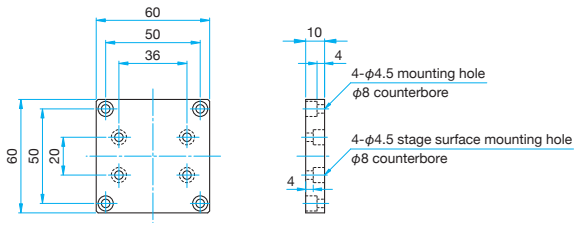

Specifications

Part Number	METRIC	TAS-24304L	TAS-20604L	TAR-25504L	TAR-34804L	TAR-38404L-M6	TAR-60554D	TAR-60704D
	INCH	—	—	—	—	TAR-38404LUU	—	—
Stage Size [mm]		24×30	18×60	25×50	34×40	38×40	60×60	60×60
Axes of Travel		XZ axis						
Travel [mm]		X axis ±4 Z axis ±4	X axis ±7.5 Z axis ±7.5	X axis ±10 Z axis ±10	X axis ±25 Z axis +25 / −20	X axis ±15 Z axis +25 / −20	X axis +27 / −0 Z axis +18 / −0	X axis +37 / −0 Z axis +33 / −1
Lead of Actuator [mm/rotation]		0.5	0.5	about 20	about 20	about 20	Coars: about 20 Fine: about 2.5	Coars: about 20 Fine: about 2.5
Vernier Readable Resolution [mm]		—		0.1				
Guide Method		Dovetail slide method						
Primary Material		Brass						
Finish		Super black chrome						
Load Capacity [N]		4.9 (0.5kgf)	9.8 (1.0kgf)	9.8 (1.0kgf)	14.7 (1.5kgf)	14.7 (1.5kgf)	24.5 (2.5kgf)	24.5 (2.5kgf)
Travel Accuracy	Straightness [μm]	20	20	30	30	30	30	30
Max. Moment Capacity	Pitch [N·m]	0.5	0.2	0.5	0.5	0.5	0.4	0.4
	Roll [N·m]	0.2	0.2	0.5	0.5	0.5	0.5	0.5
Moment Stiffness	Pitch [″/N·cm]	—	—	3.98	2	2	—	—
Weight [kg]		0.42	1.0	0.52	1.1	1.2	0.83	0.85

2D CAD 3D CAD

Outline Drawing

TAS-24304L
Pan head screw M3×5…4 screws

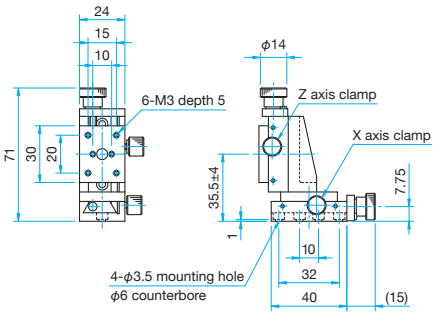

TAS-20604L
Hexagonal socket head cap screw M4×10…4 screws

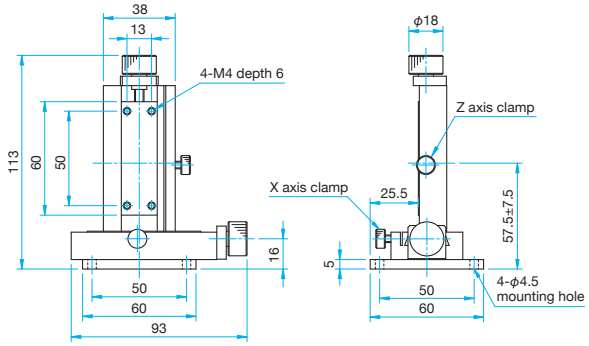

TAR-25504L
Pan head screw M3×8…4 screws

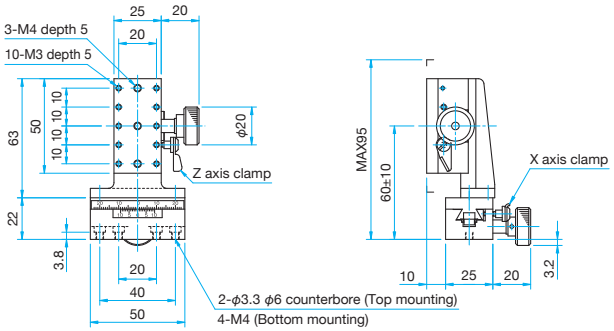

TAR-34804L
Hexagonal socket head cap screw M4×8…4 screws

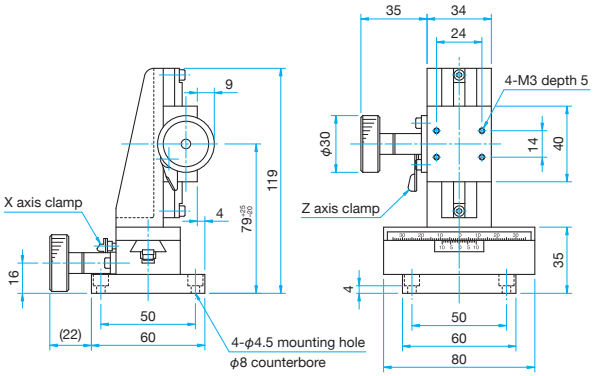

TAR-38404L-M6/38404LUU
Hexagonal socket head cap screw M6×10…4 screws (M6)
Hexagonal socket head cap screw 1/4-20UNC×3/8…4 screws (UU)

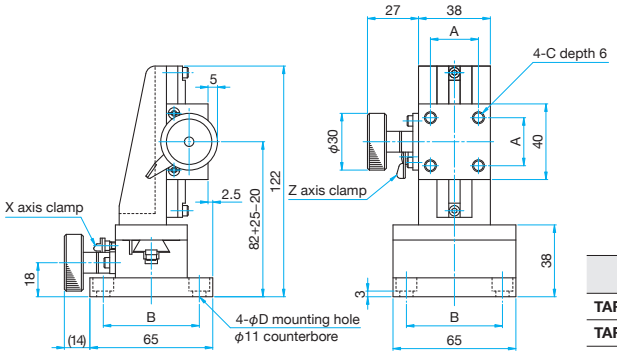

Part Number	A (mm)	B (mm)	C	D (mm)
TAR-38404L-M6	25	50	M6	6.5
TAR-38404LUU	25.4	50.8	1/4-20UNC	7

TAR-60554D
Hexagonal socket head cap screw M4×8…4 screws

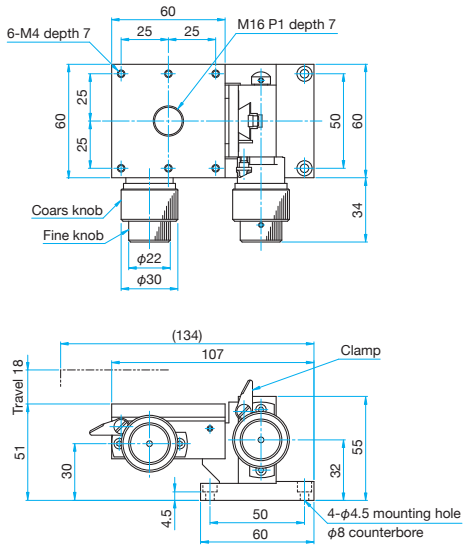

TAR-60704D
Hexagonal socket head cap screw M4×8…4 screws

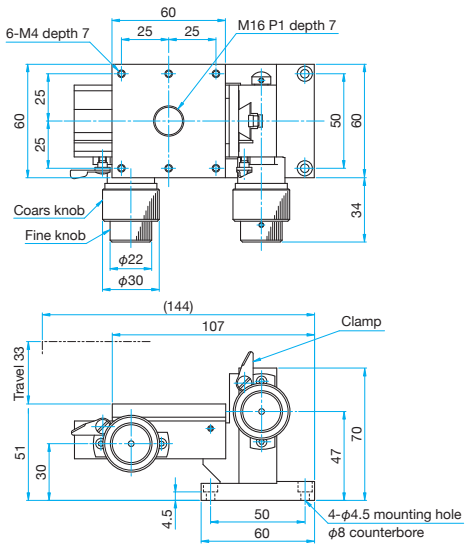

Application Systems
Optics & Optical Coatings
Opto-Mechanics
Bases
Manual Stages
Actuators & Adjusters
Motoeized Stages
Light Sources & Laser Safety
Index
Guide
X Axis Stages
XY Axis Stages
Z Axis Stages
XZ Axis Stages
XYZ Axis Stages
Rotation Stages
Goniometer
Tilt Stages
Vacuum
Ball Bearing Guide
Crossed Roller
Dovetail
Lapping
V Groove Screw
Ohters
15 × 15 mm
25 × 25 mm
40 × 40 mm
60 × 60 mm
65 × 65 mm
80 × 80 mm
100 × 100 mm
120 × 120 mm
Others

XYZ Axis Leadscrew Translation Stages
XYZ Axis Rack and Pinion Dovetail Translation Stages

TAS-5L RoHS
TAR-5L RoHS

Application Systems
Optics & Optical Coatings
Opto-Mechanics
Bases
Manual Stages
Actuators & Adjusters
Motoeized Stages
Light Sources & Laser Safety
Index
Guide
X Axis Stages
XY Axis Stages
Z Axis Stages
XZ Axis Stages
XYZ Axis Stages
Rotation Stages
Goniometer
Tilt Stages
Vacuum
Ball Bearing Guide
Crossed Roller
Dovetail
Lapping
V Groove Screw
Ohters
15 × 15 mm
25 × 25 mm
40 × 40 mm
60 × 60 mm
65 × 65 mm
80 × 80 mm
100 × 100 mm
120 × 120 mm
Others

TAS model : XYZ axis leadscrew dovetail translation stages with rectangular form factor, enabling longer travel with fine adjustment.
TAR model : XYZ axis rack and pinion dovetail translation stages, suitable for frequent use that requires quick movement and long travel.

- Low cost, high stability, and long travel due to form factor.
- Large adjustment knob provides high sensitivity.

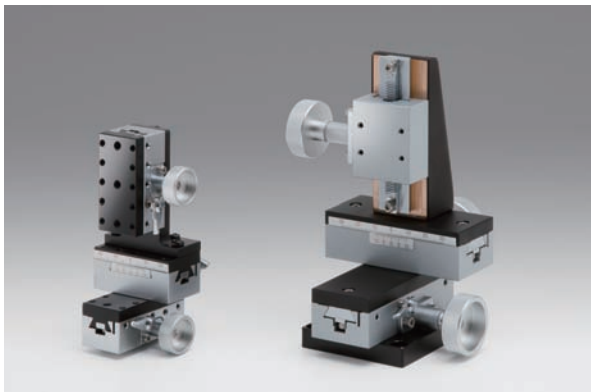

Guide

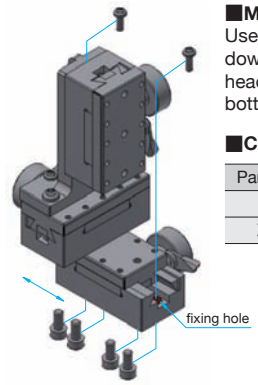

■Mounting Method of TAR-25505L
Use M3 pan head screws when mounting down to a base, from the top, and M4 pan head screws for mounting from the bottom.

■Components

Part Number	TAR-25505L
Z axis	TARW-25503L
XY axis	TARW-25502

Attention

- ▶Micrometer brackets may extend above the top surface of some stages. Check drawings for more information.
- ▶Note that some samples might not be able to be fixed on the stage depending on their shapes, or required travel might not be ensured.

Bottom Plate — Primary material: Aluminum, Finish: Black Anodized

TAR-34805L include a base plate that allows mounting on instruments or bases fitted with M4 tapped holes on 50 × 50mm, preventing the handle from contacting the mounting surface.

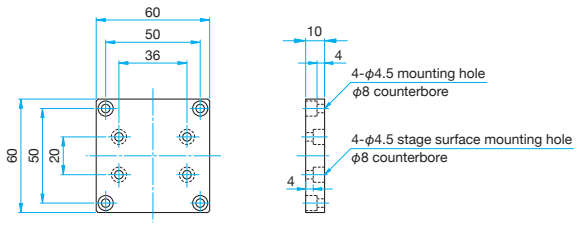

Specifications

Part Number	METRIC	TAS-24305L	TAS-20605L	TAR-25505L	TAR-34805L	TAR-38405L-M6
	INCH	–	–	–	–	TAR-38405LUU
Stage Size [mm]		24×30	18×60	25×50	34×40	38×40
Axes of Travel		XYZ axis				
Travel [mm]		XY axis ±4 Z axis ±4	XY axis ±7.5 Z axis ±7.5	XY axis ±10 Z axis ±10	XY axis ±25 Z axis +25 / –20	XY axis ±15 Z axis +25 / –20
Lead of Actuator [mm/rotation]		0.5	0.5	about 20	about 20	about 20
Vernier Readable Resolution [mm]		–		0.1		
Guide Method		Dovetail slide method				
Primary Material		Brass				
Finish		Super black chrome				
Load Capacity [N]		4.9 (0.5kgf)	9.8 (1.0kgf)	9.8 (1.0kgf)	14.7 (1.5kgf)	14.7 (1.5kgf)
Travel Accuracy	Straightness [μm]	30	30	30	30	30
Max. Moment Capacity	Pitch [N·m]	0.1	0.1	0.5	0.5	1.5
	Roll [N·m]	0.1	0.1	0.5	0.5	1.0
Weight [kg]		0.62	1.5	0.75	2.1	1.8

2D CAD 3D CAD

Outline Drawing

TAS-24305L

Pan head screw M3×5…4 screws

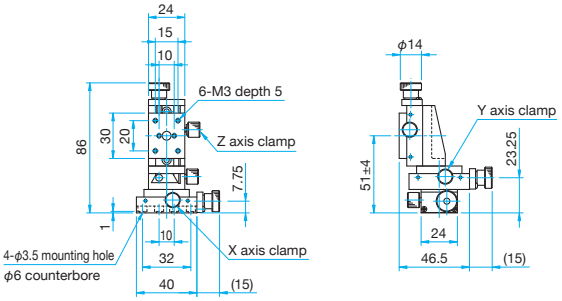

TAS-20605L

Hexagonal socket head cap screw M4×10…4 screws

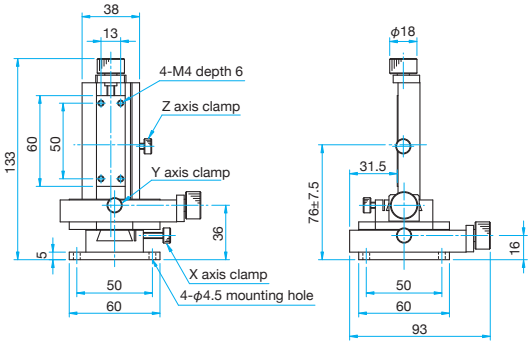

TAR-25505L

Pan head screw M3×8…4 screws

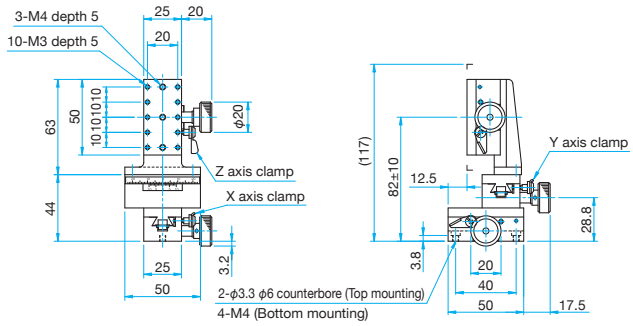

TAR-34805L

Hexagonal socket head cap screw M4×8…4 screws

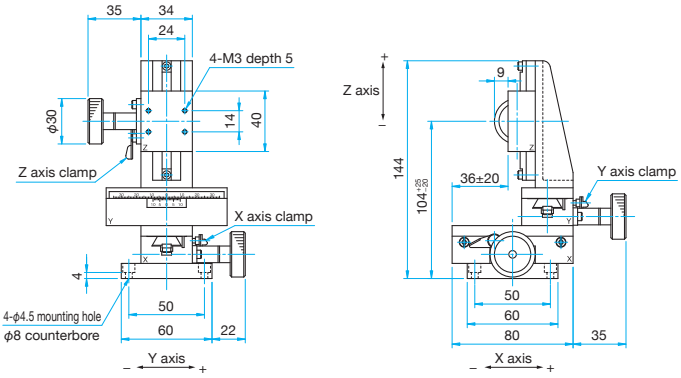

TAR-38405L-M6/38405LUU

Hexagonal socket head cap screw M6×10…4 screws (M6)
Hexagonal socket head cap screw 1/4-20UNC×3/8…4 screws (UU)

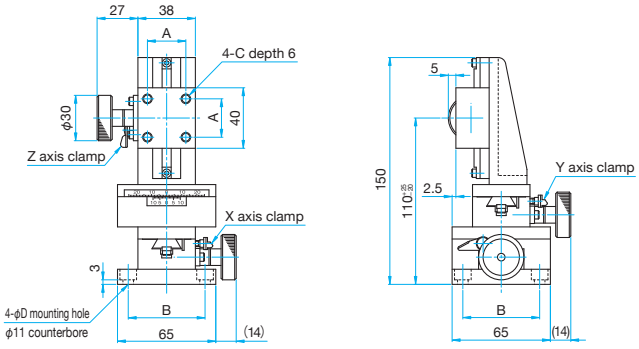

Part Number	A (mm)	B (mm)	C	D (mm)
TAR-38405L-M6	25	50	M6	6.5
TAR-38405LUU	25.4	50.8	1/4-20UNC	7